Brake Caliper DH 030 FHA

spring activated – hydraulically released

RINGSPANN®

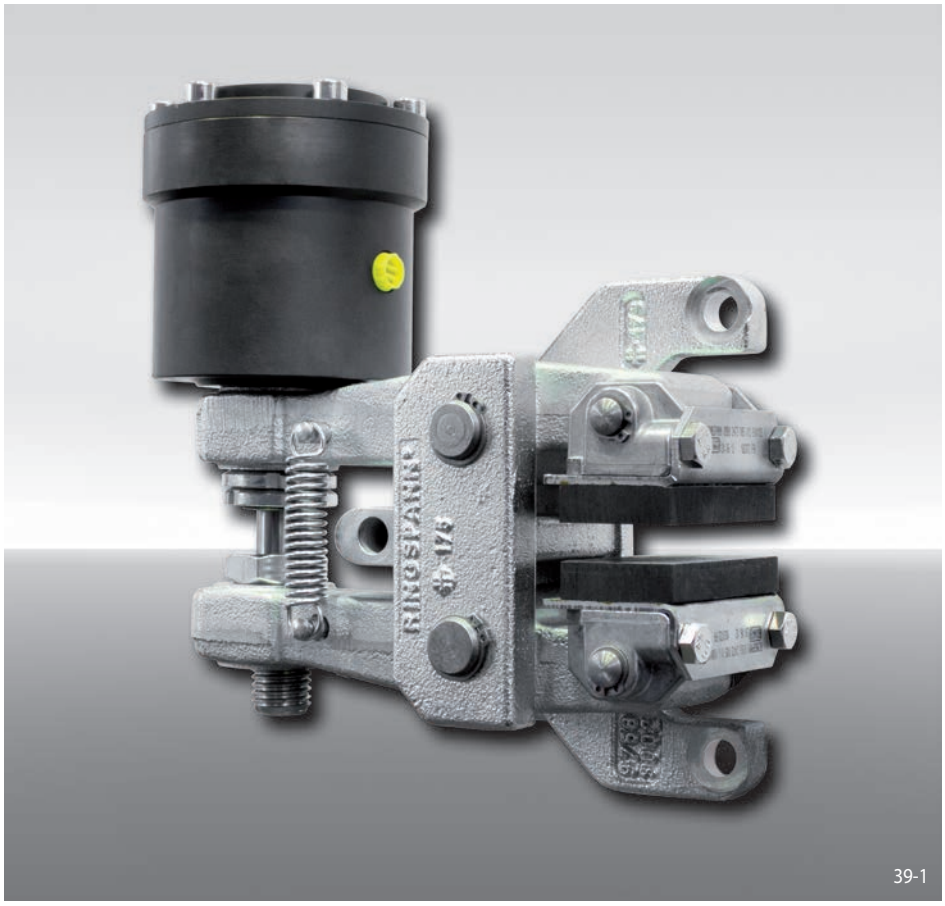

39-1

Features

Features	Code
Brake Caliper	D
Mounting to the machine at right angles to the brake disc	H
Frame size 030	030
Spring activated	F
Hydraulically released	H
Automatic adjustment to accommodate friction block wear	A
Thruster 240	240
Thruster mounted right or left available	R L
Thickness of brake disc 12,5 mm or 25 mm	12 25

Example for ordering

Brake Caliper DH 030 FHA, thruster 240, thruster mounted right, thickness of brake disc 12,5 mm:

DH 030 FHA - 240 R - 12

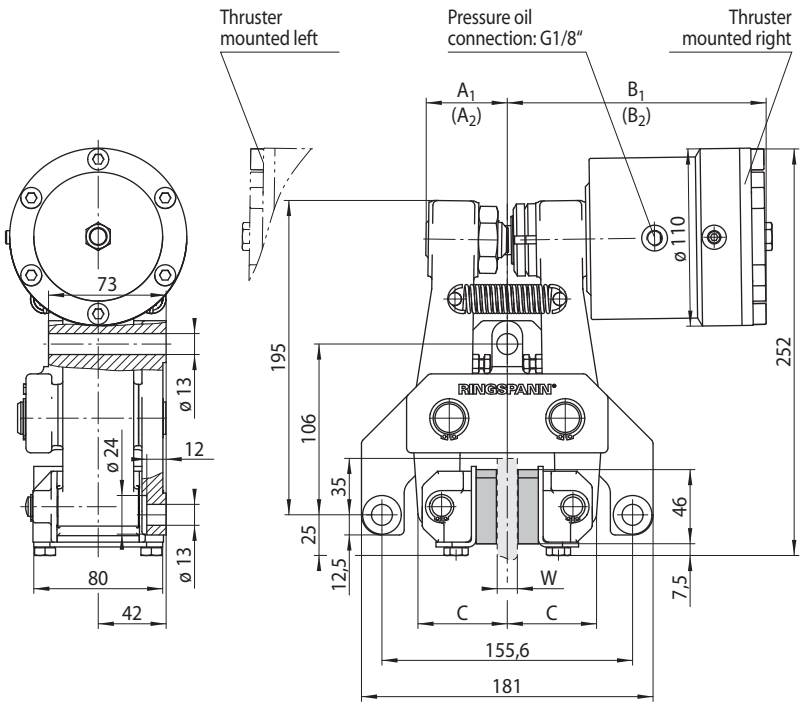

Thickness of brake disc W mm	A_1 mm	(A_2) mm	B_1 mm	(B_2) mm	C mm
12,5	51	(69)	161	(180)	55
25	57	(76)	168	(187)	62

Values in brackets resulting with maximum friction block wear.

39-2

Technical Data

	Brake Caliper DH 030 FHA with thruster 240
Brake disc diameter mm	Braking torque Nm
200	620
250	840
300	1 100
355	1 300
430	1 600
520	2 000
Clamping force	11 000 N
Oil pressure	min. 40 bar max. 120 bar
Oil volume	max. 6 cm^3
Weight	13,8 kg

The braking torques shown in the table are based on a theoretical friction coefficient of 0,4.